18.Front Differential Assembly

A: REMOVAL

1) Remove the manual transmission assembly from the vehicle. <Ref. to 5MT-25, REMOVAL, Manual Transmission Assembly.>
2) Remove the transfer case together with the extension case assembly. <Ref. to 5MT-39, REMOVAL, Transfer Case and Extension Case Assembly.>
3) Remove the transmission case. <Ref. to 5MT-51, REMOVAL, Transmission Case.>
4) Remove the drive pinion shaft assembly. <Ref. to 5MT-59, REMOVAL, Drive Pinion Shaft Assembly.>
5) Remove the main shaft assembly.
<Ref. to 5MT-54, REMOVAL, Main Shaft Assembly.>
6) Remove the front differential assembly.

NOTE:
- Do not confuse the right and left roller bearing outer races.
- Be careful not to damage the oil seal of retainer.

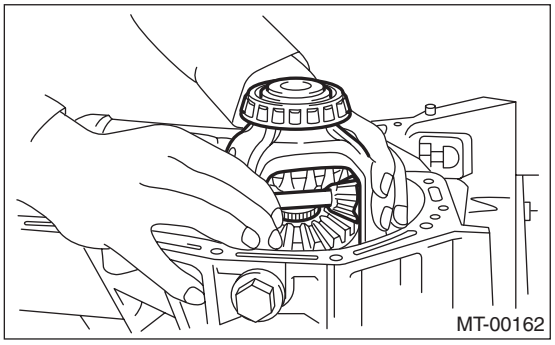

7) Remove the differential side retainers using ST.
ST 18630AA010 WRENCH COMPL RETAINER

NOTE:
ST 499787000 WRENCH ASSEMBLY can also be used.

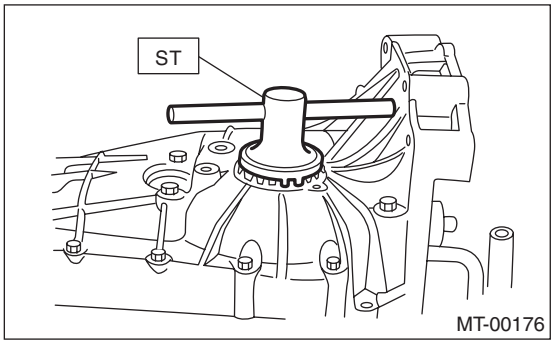

8) Remove the bearing outer race from the transmission case.
ST 398527700 PULLER ASSY

B: INSTALLATION

1) Install the differential side retainers using ST.
ST 18630AA010 WRENCH COMPL RETAINER
2) Install the bearing outer race to the transmission case.
3) Install the front differential assembly.

NOTE:
Be careful not to fold the sealing lip of oil seal.

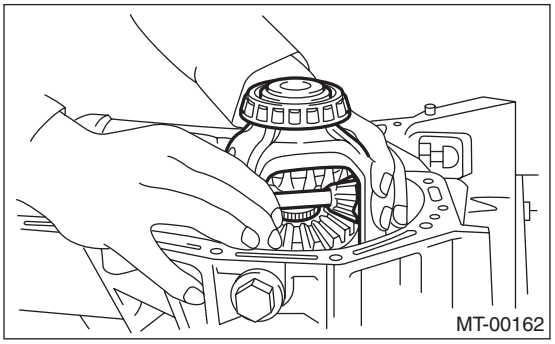

4) Install the main shaft assembly.
<Ref. to 5MT-54, INSTALLATION, Main Shaft Assembly.>
5) Install the drive pinion shaft assembly. <Ref. to 5MT-59, INSTALLATION, Drive Pinion Shaft Assembly.>
6) Install the transmission case. <Ref. to 5MT-51, INSTALLATION, Transmission Case.>
7) Install the transfer case together with the extension case assembly. <Ref. to 5MT-39, INSTALLATION, Transfer Case and Extension Case Assembly.>
8) Install the manual transmission assembly to the vehicle. <Ref. to 5MT-28, INSTALLATION, Manual Transmission Assembly.>

C: DISASSEMBLY

1. DIFFERENTIAL CASE ASSEMBLY

1) Loosen the twelve bolts and remove hypoid driven gear.

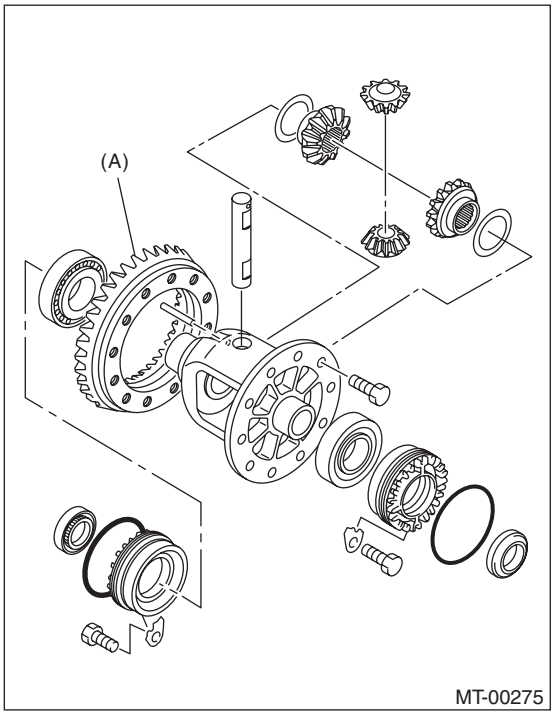

(A) Hypoid driven gear

2) Drive out the straight pin from differential assembly toward hypoid driven gear side.
ST 899904100 STRAIGHT PIN REMOVER

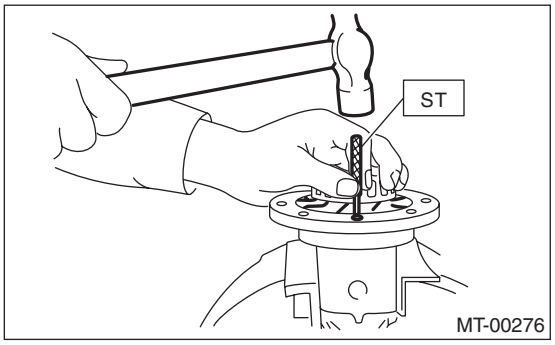

3) Pull out the pinion shaft, and remove the differential bevel pinion, differential bevel gear and washer.

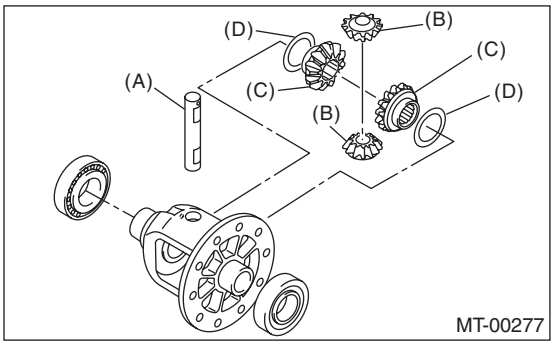

(A) Pinion shaft
(B) Differential bevel pinion
(C) Differential bevel gear
(D) Washer

4) Using the ST, remove the roller bearing.
ST 899524100 PULLER SET

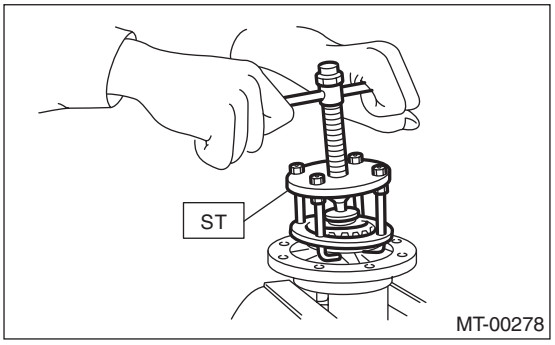

2. SIDE RETAINER

1) Remove the O-ring.

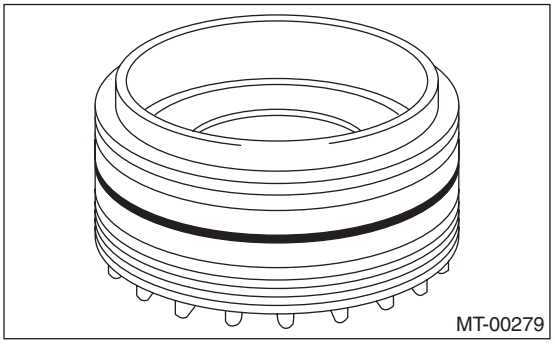

2) Remove the oil seal.

NOTE:
- Remove using the flat tip screwdriver.
- Do not reuse the oil seal. Replace the oil seal with a new part.

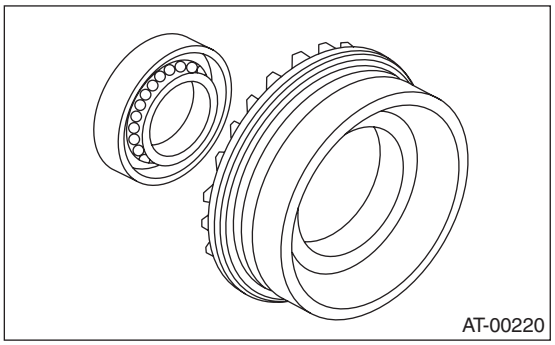

D: ASSEMBLY

1. DIFFERENTIAL CASE ASSEMBLY

1) Install the differential bevel gear and differential bevel pinion together with washers, and insert the pinion shaft.

NOTE:
Face the chamfered side of washer toward gear.

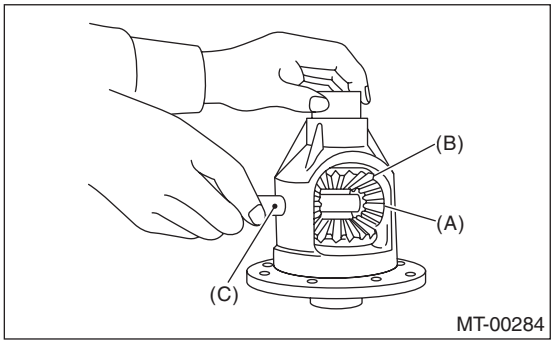

(A) Differential bevel pinion
(B) Differential bevel gear
(C) Pinion shaft

2) Measure the backlash between differential bevel gear and differential pinion. If backlash is not within specified value, install a suitable washer to adjust. <Ref. to 5MT-72, ADJUSTMENT, Front Differential Assembly.>

NOTE:
Be sure the pinion gear teeth contacts adjacent gear teeth during measurement.
ST1 498247001 MAGNET BASE
ST2 498247100 DIAL GAUGE

Standard backlash
0.13 — 0.18 mm (0.0051 — 0.0071 in)

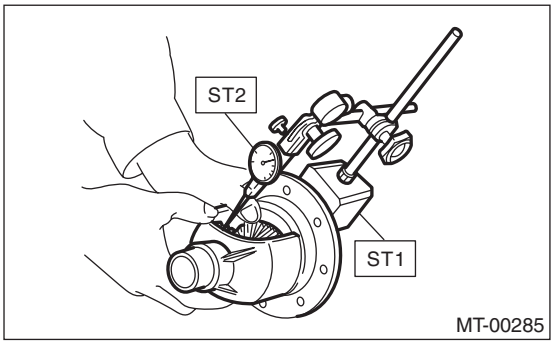

3) Align the pinion shaft and differential case with each hole, and drive the straight pin into the holes from the hypoid driven gear using the ST.

NOTE:
Lock the straight pin after installing.
ST 899904100 STRAIGHT PIN REMOVER

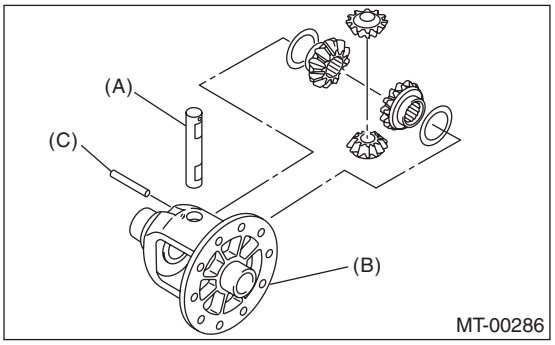

(A) Pinion shaft
(B) Differential case
(C) Straight pin

4) Install the roller bearing to differential case.

CAUTION:
Do not apply a load in excess of 10 kN (1 ton, 1.1 US ton, 1.0 Imp ton).

NOTE:
Be careful because the roller bearing outer races are used as a set.
ST1 499277100 BUSHING 1-2 INSTALLER
ST2 398497701 ADAPTER

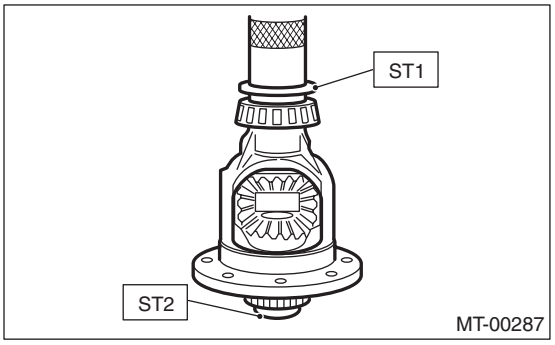

5) Install the hypoid driven gear to the differential case using twelve bolts.

Tightening torque:
T: 62 N·m (6.3 kgf-m, 45.6 ft-lb)

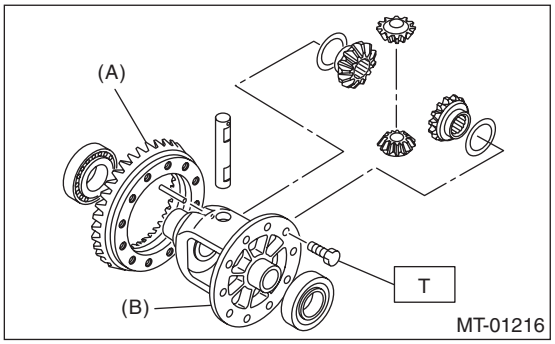

(A) Hypoid driven gear
(B) Differential case

2. SIDE RETAINER

1) Install a new oil seal.

ST 18675AA000 DIFFERENTIAL SIDE OIL SEAL INSTALLER

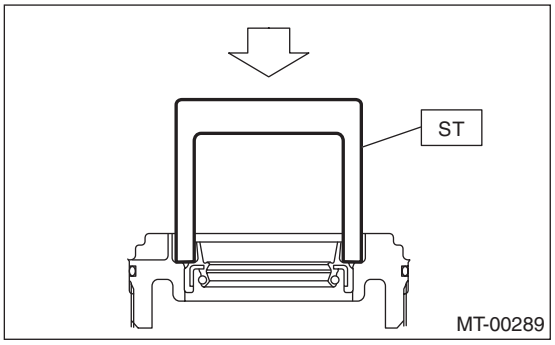

CAUTION:
- **When press-fitting the oil seal to the side retainer, tap with a plastic hammer etc. to press in.**
- **Never use a press.**

2) Install a new O-ring.

NOTE:
Do not stretch or damage the O-ring.

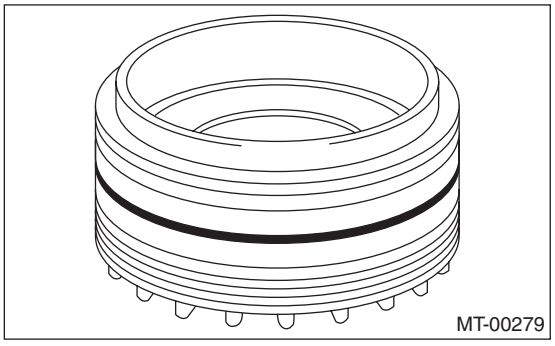

E: INSPECTION

Repair or replace the differential gear in the following cases:
- If the hypoid drive gear and drive pinion shaft tooth surfaces are damaged, excessively worn, or seized.
- When the roller bearing on the drive pinion shaft has a worn or damaged roller path.
- When there is damage, wear or seizure of the differential bevel pinion, differential bevel gear, washer, pinion shaft or straight pin.
- When the differential case sliding surfaces are worn or damaged.

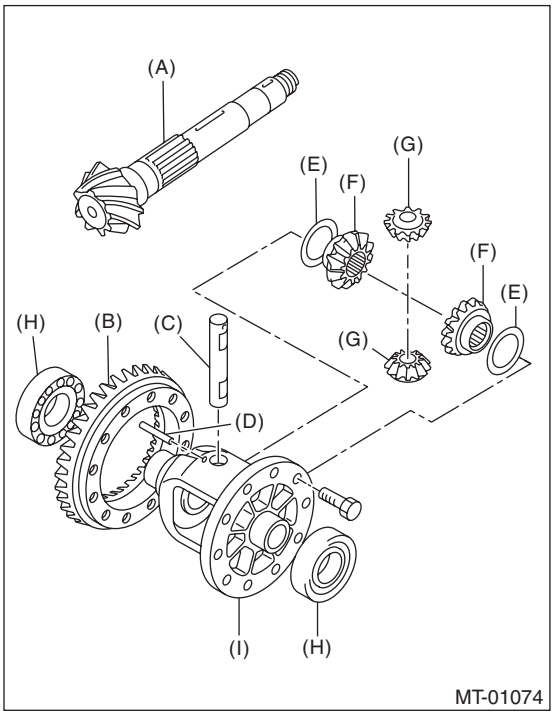

(A) Drive pinion shaft
(B) Hypoid driven gear
(C) Pinion shaft
(D) Straight pin
(E) Washer
(F) Differential bevel gear
(G) Differential bevel pinion
(H) Roller bearing
(I) Differential case

1. BEVEL PINION GEAR BACKLASH

Measure the backlash between differential bevel gear and differential bevel pinion. If backlash is not within specified value, install a suitable washer to adjust.

NOTE:
Be sure the pinion gear teeth contacts adjacent gear teeth during measurement.
ST1 498247001 MAGNET BASE
ST2 498247100 DIAL GAUGE

Standard backlash
0.13 — 0.18 mm (0.0051 — 0.0071 in)

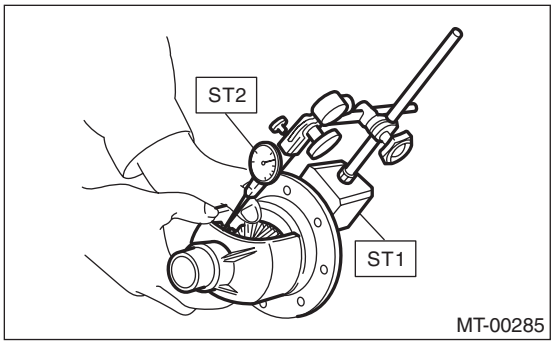

2. HYPOID GEAR BACKLASH

1) Set the ST1, ST2 and ST3. Insert the needle through transmission oil drain plug hole so that the needle comes in contact with the tooth surface on the right corner, and check the backlash.
ST1 498247001 MAGNET BASE
ST2 498247100 DIAL GAUGE
ST3 498255400 PLATE
2) Install SUBARU genuine axle shafts to both sides, rotate in the inversion direction so that the gauge contacts the tooth surface, and read the dial gauge
Part No. 38415AA100AXLE SHAFT

Backlash:
0.13 — 0.18 mm (0.0051 — 0.0071 in)

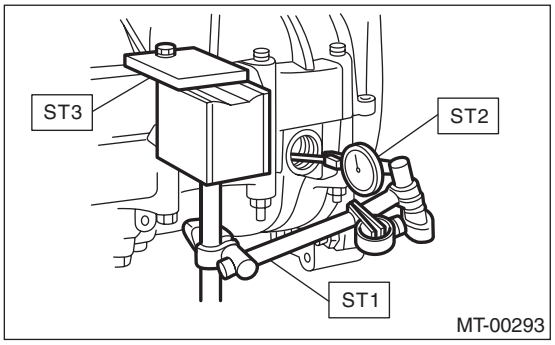

NOTE:
If the backlash is outside the specified range, adjust it by turning the holder in the RH side case.

3. TOOTH CONTACT OF HYPOID GEAR

Check tooth contact of hypoid gear as follows: Apply a thin uniform coat of red lead on both teeth surfaces on 3 or 4 teeth of the hypoid gear. Move the hypoid gear back and forth by turning the transmission main shaft until a definite contact pattern is developed on the hypoid gear, and judge whether face contact is correct. If it is improper, make adjustment. <Ref. to 5MT-72, ADJUSTMENT, Front Differential Assembly.>

- Tooth contact is correct.

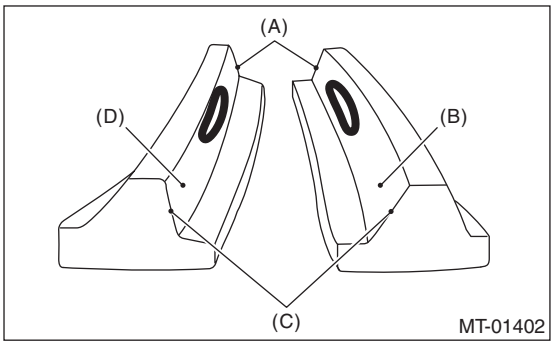

(A) Toe
(B) Coast side
(C) Heel
(D) Drive side

F: ADJUSTMENT

1. BEVEL PINION GEAR BACKLASH

1) Disassemble the front differential assembly. <Ref. to 5MT-69, DISASSEMBLY, Front Differential Assembly.>
2) Select a different washer from the table and install.

Washer	
Part No.	Thickness mm (in)
803038021	0.925 — 0.950 (0.0364 — 0.0374)
803038022	0.975 — 1.000 (0.0384 — 0.0394)
803038023	1.025 — 1.050 (0.0404 — 0.0413)

3) Adjust until the standard value is obtained.

Standard backlash
0.13 — 0.18 mm (0.0051 — 0.0071 in)

2. HYPOID GEAR BACKLASH

Adjust the backlash by turning the holder in the RH side case.

ST 18630AA010 WRENCH COMPL RETAINER

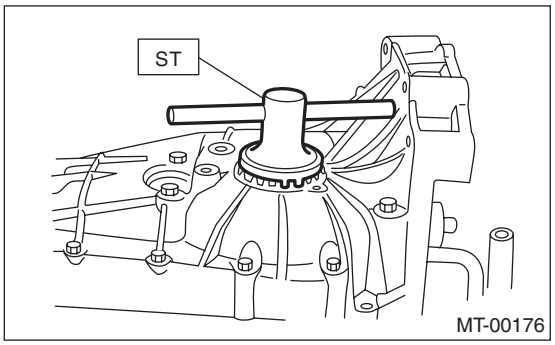

NOTE:
Each time side retainer rotates one tooth, backlash changes by 0.05 mm (0.020 in).

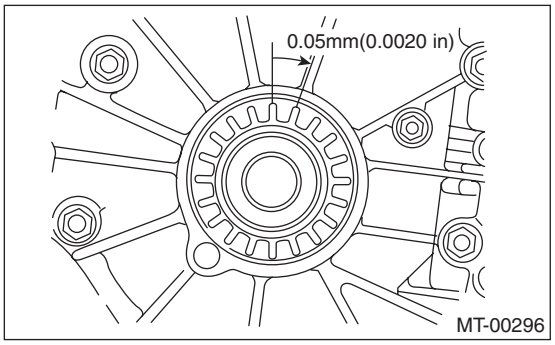

3. TOOTH CONTACT OF HYPOID GEAR

1) Adjust until correct teeth contact is obtained.
2) Check tooth contact, and perform the adjustment as follows.

- Tooth contact

Check item: Tooth contact surface is slightly shifted toward the toe side under a no-load condition. (When driving, it moves towards the heel side.)

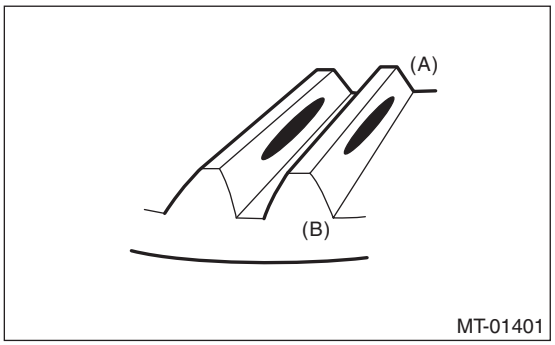

(A) Toe side
(B) Heel side

- Face contact

Check item: Backlash is too large.
Contact pattern

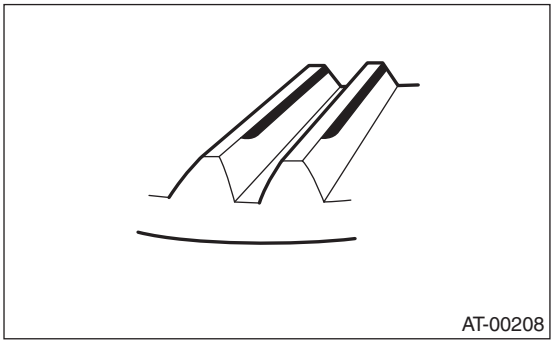

Corrective action: Reduce thickness of pinion height adjusting washer in order to bring the drive pinion closer to driven gear side.

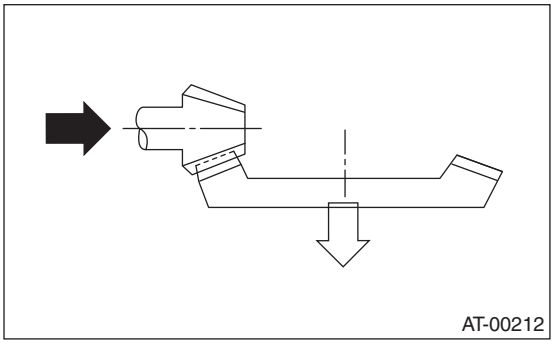

- Flank contact

Check item: Backlash is too small.
Contact pattern

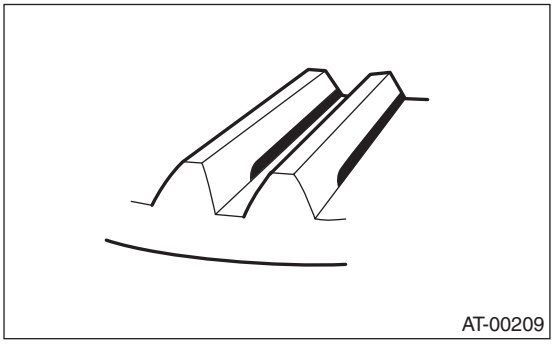

Corrective action: Increase the thickness of the pinion height adjusting washer in order to place the drive pinion away from the driven gear.

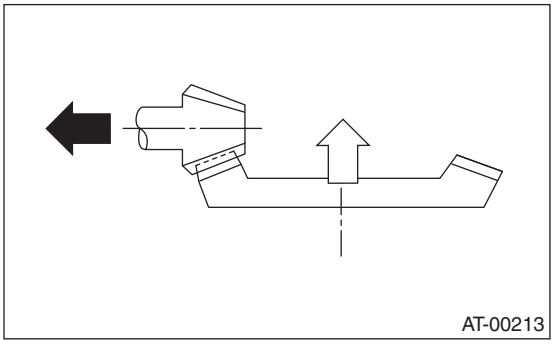

- Toe contact (inside contact)

Check item: Teeth contact area is too small.

Contact pattern

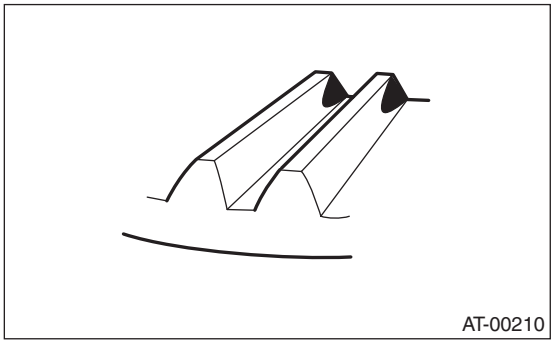

Corrective action: Increase thickness of pinion height adjusting washer according to the procedures for moving the drive pinion closer to the driven gear.

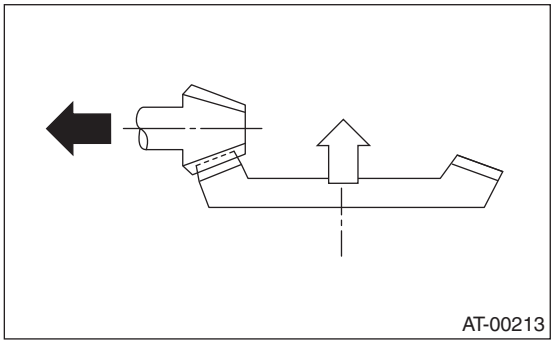

- Heel contact (outside end contact)

Check item: Teeth contact area is too small.

Contact pattern

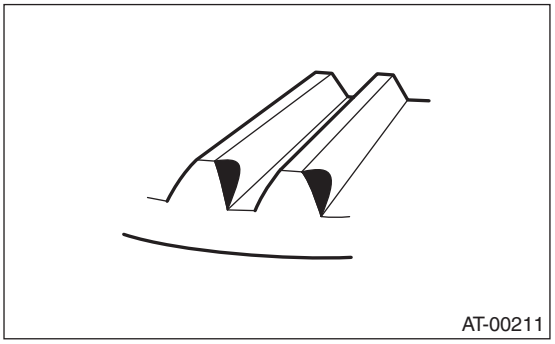
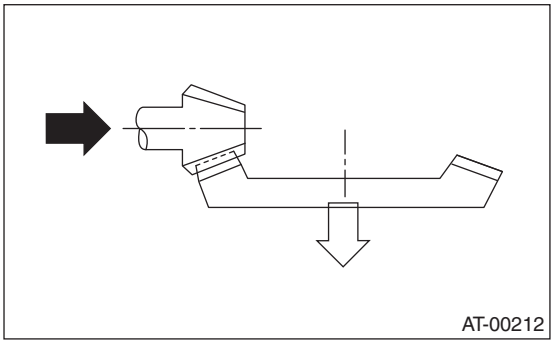
Corrective action: Reduce thickness of the pinion height adjusting washer according to the procedures for moving the drive pinion away from the driven gear.